YN900

摄 像 灯

Pro LED Video Light

使用说明书

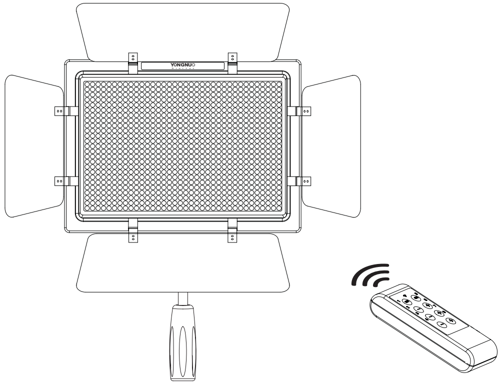

在使用产品前，请认真阅读说明书并妥善保管以便将来查阅

总述

首先感谢您使用永诺YN900摄像灯，它由900颗超大发光面积的灯珠组成，同等能耗，亮度更高；采用永诺专有LED驱动技术，拍摄时绝不出现波纹、频闪等现象；它采用编码器数字调光模式，调光精准、可靠，不会因长久使用导致灯光抖动等不良现象；配有8频道分组功能；带有电池电量测试;可用遥控器或手机无线遥控,分组控制摄像灯的亮度等强大功能。配置多功能D型灯座适合多种不同的固定方式。

一、产品结构

1、反光板
2、LED灯珠
3、手柄
4、电池锁扣
5、直流电源插孔
6、散热装置
7、电源开关/亮度调节旋钮
8、LED数字显示屏
9、细调切换按钮
10、电量测试按钮
11、粗调切换按钮
12、蓝牙连接指示灯
13、频道切换按钮

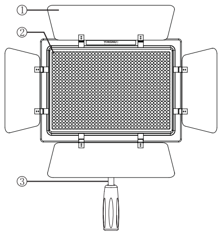

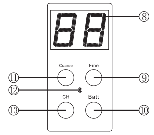

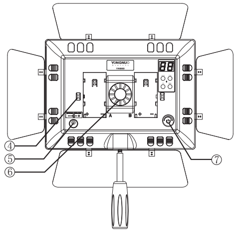

遥控器结构

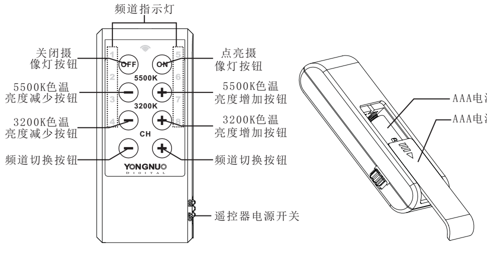

二、功能简介

1、配置多频道无线遥控器，可以离机调节亮度及开关，同时可以分别控制8组摄像灯的亮度及开关，让您操作更轻松。
2、可在官网下载手机APP，通过手机控制LED摄像灯，读取当前LED摄像灯的亮度及频道，可分别控制8组摄像灯的亮度及开关，让您随心所欲的控制LED摄像灯。
3、配备D型灯座方便在各种灯架上安装固定使用LED摄像灯。
4、YN900采用900个高品质超大发光面积芯片的LED灯珠，亮度更高、光斑更均匀、寿命更长。
5、YN900采用永诺专有LED驱动技术，拍摄时绝不出现波纹、频闪等现象。
6、YN900采用编码器数字调光，可分粗调、细调模式，使用更方便。
7、YN900采用LED数字显示屏，功率输出更直观。
8、支持外接直流电源输入，方便您长时间拍摄使用(电源适配器为选配)。
9、采用风扇强制散热，真正解决LED长时间工作的发热问题。
10、配置2块色温板，适合不同环境下使用。

三、使用方法

1、安装电池

a、安装锂电池时按箭头方向将电池装入卡槽；要同时安装两个电池时，才能点亮900颗灯珠。

注：建议使用两个4000mah容量以上的电池，此容量电池在最高亮度下可使用约60分钟，2200mah容量在最高亮度下可使用约30分钟，5800mah在最高亮度下可使用约90分钟，不使用时请取下电池。

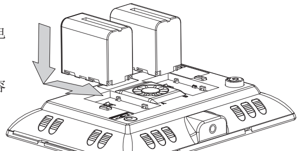

适用电池：索 NP-F系列

NP-F750	NP-F550	NP-F530	NP-F970	NP-F330
NP-F950	NP-F570	NP-F770	NP-F960	NP-F930
NP-F930/B	NP-F970/B	NP-F950/B		

b、拆卸锂电池时，请先按下电池锁扣再取出锂电池

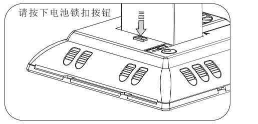

2、根据您的需要可以通过以下方式固定摄像灯:

a、直接固定在三脚架上使用

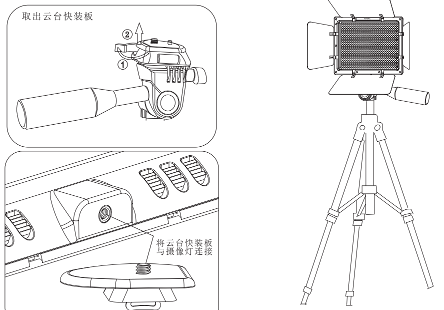

摄像灯固定在三脚架上

b、通过附带的多功能D型灯座固定在摄影棚、灯架、三脚架上使用。

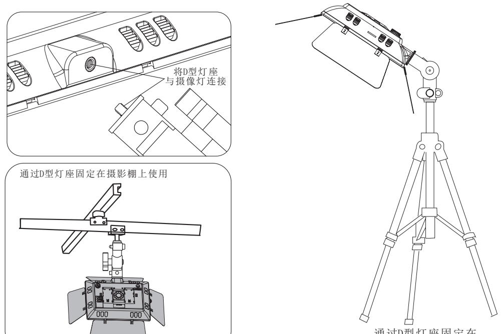

通过D型灯座固定在灯架或三脚架上使用

c、通过附带的手柄手持使用。

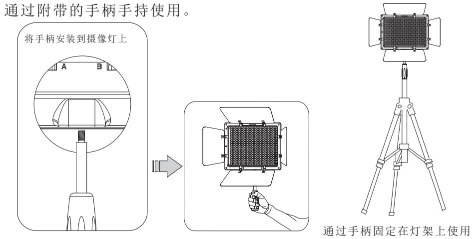

通过手柄固定在灯架上使用

3、开机及亮度调节

a、按电源开关，LED摄像灯点亮，向右旋转增加亮度，向左旋转减小亮度。

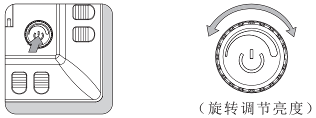

（旋转调节亮度）

b、亮度调节方式切换

可分粗调、细调模式，使用更方便。按下Coarse按钮切换到粗调模式，调节亮度时按10%为一个调节单位。按下Fine按钮则切换到细调模式，此时调节亮度时则按1%为一个调节单位。

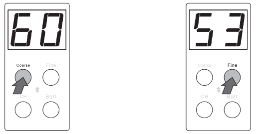

粗调模式　　细调模式

4、电量测试

按下Batt电量测试按钮，此时的读数为两个电池剩余电量的百分比，电量的读数可分为P1-P9分别就是10%-90%，如右图显示读数为P3则相对电量为30%（注：低亮度时测试与高亮度时测试剩余电量是不相同的，测的是当前亮度下，可以使用时间的长短）。

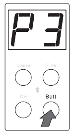

5、频道切换

按频道切换按钮CH，可切换遥控接收频道，显示屏上出现H1到H8，假设此时切换至频道H2，则也将遥控器的频道调至CH2发射频道此时遥控器就可以调节摄像灯了。如您购买多台此型号的摄像灯，可以分组控制亮度与开关，最多可分8组。(遥控器面板上有1-8的数字每个数字则对应相应的频道，通过CH+/CH- 来切换频道）。

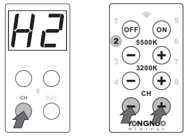

将摄像灯的频道调节到您想要的频道

通过调节遥控器的CH+/CH-将遥控器调到跟您想控制的摄像灯相同的频道

6、外接电源供电

可选配永诺电源适配器，以获得摄像灯的长时间工作。当使用外接电源时，摄像灯将自动切断电池供电且不对电池充电。电源接口为内正外负，输入电压为19伏，电流为5安。

注：如使用其他电源适配器造成的产品故障，不予保修。

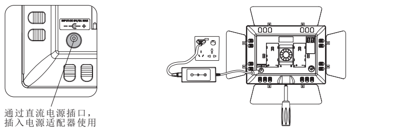

7、风扇散热

本产品采用散热扇智能散热，有效解决LED发热问题，光衰更小，寿命更长。风扇运行为自动控制，为保证产品的使用寿命，不能强行关闭风扇运行，并且保证进风口与散热孔通畅无堵塞。

四、更换色温板

本产品附带2块色温板，从产品侧面色温片卡槽插入即可使用，满足您在不同的环境下使用。

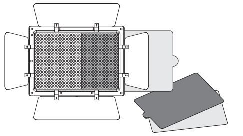

五、遥控调光模式

产品附带的无线遥控器可以调节本产品的亮度及开关，遥控距离可达30米。

六、手机APP遥控

本产品支持手机遥控(支持Android4.3且蓝牙为4.0版本/IOS7.0且iPhone4S以上版本的手机),APP可以从永诺官网下载或通过彩盒二维码扫描直接下载。

1、APP控制页面说明

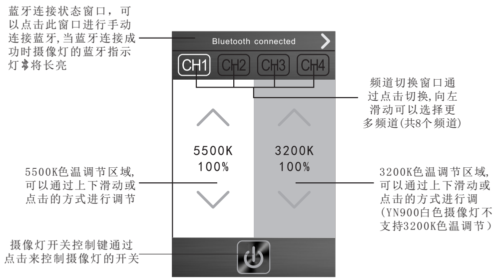

七、产品规格

光源	900颗LED灯珠	光照角度	55
色温	5500K	手机遥控距离	大于30米
显色指数	大于或等于95	遥控距离	大于30米
输出功率	54瓦	重量	1480克
流明值	7200LM	体积	260*188*48毫米
平均寿命	50000小时	电源	2个锂电池或外接19伏5安直流电源
所含物品：摄像灯（1）、遥控器（1）、手柄（1）、说明书（1）、色温板（2）D型灯座（1） 注：如有缺失请与经销商联系			

八、故障分析及排除

在使用过程中，您可能遇到以下问题：

故障	原因	处理方法
打开电源开关完全无反应	电池电量不足	使用新电池或外接电源使用
	电路板损坏	返厂维修
亮度不足，调至最亮仍然很暗	电池电量不足	使用新电池或充电后使用
测试电量不准确，调高亮度时显示低电量，调低亮度后电量又满格了	电池电量测试所指示的是，当前亮度下能使用的时间长短。调高亮度后，需要的电量更多，所使用的时间变短，故电量显示变少了	属于正常现象，无需处理
无法遥控摄像灯	距离太远	遥控的距离在30米内
散热风扇有时工作，有时停止工作。	散热风扇为摄像灯自动控制，不能手动关闭或开启。	属于正常现象
遥控器上面指示灯亮度变暗	电池电量不足	更换2个AAA电池

经销商：深圳市永诺摄影器材股份有限公司
地址：　深圳市福田区华强北路赛格科技园2栋5楼A511室
电话：0755-8376 2448
传真:0755-8376 2765
网址：www.hkyongnuo.com
生产商：深圳市永诺电器有限公司
地址：　深圳市龙岗区龙岗街道同乐村稳好工业厂区1号厂房
电话：0755-8480 8443
售后电话：400-0013-888

YONGNUO DIGITAL

YN900

Pro LED Video Light
User Manual

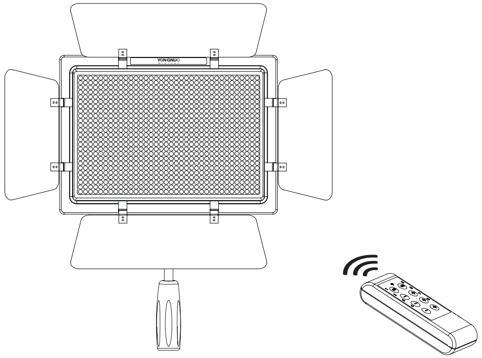

Before using this product, please read this user manual carefully and keep it properly for reference.

Overview

Thank you for choosing YONGNUO YN900 LED video light! YN900 is formed by 900 lamp beads with extra-large luminous area. In the same energy consumption, the luminous intensity of the lamp beads of YN900 is higher. YN900 adopts proprietary LED driving technology which does great help to effectively avoid corrugation and stroboscopic flash. It also adopts encoder digital dimming system which helps to make accurate and reliable dimming. YN900 is equipped with 8 channel grouping function and battery capacity testing function. And, it also supports remote controlling with remote controller, wireless controlling with mobile phone and group controlling the luminous intensity of YN900 etc. The multifunctional Type-D lamp holder configured is suitable for multiple different fastening methods.

I.Product Structure

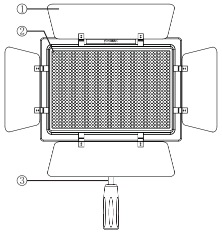

1. Reflector
2. LED lamp beads
3. Hand grip
4. Battery lock
5. DC supply hub
6. Heat abstractor
7. Power switch/ Luminance adjusting knob
8. LED digital display screen
9. Fine Button
10. Battery capacity testing button (Batt button)
11. Coarse button
12. Bluetooth indicator
13. Channel switching button

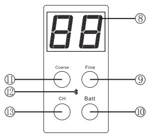

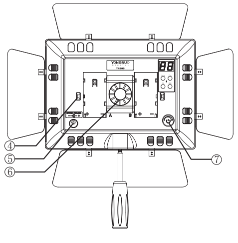

Remote Controller Structure

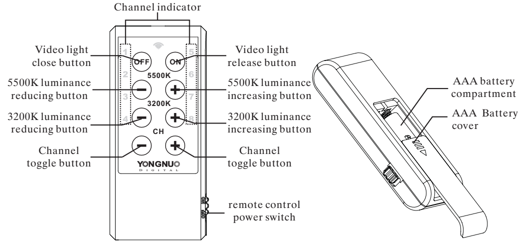

Ⅱ. Function Introduction

1. YN900 is equipped with multi channel wireless remote controller which is used to adjust the luminous intensity and control the switch of YN900. Furthermore, it is very convenient to use this controller to control the luminous intensity and the switches of 8 groups of video lights.
2. A mobile APP is provided on our official website. With this mobile APP, you can control this LED video light with your mobile phone, read the current parameter of the luminous intensity and channel, and, control the luminous intensity and the switches of 8 groups of video lights individually. You can control your LED video light as needed.
3. YN900 is equipped with a Type-D lamp holder which is very convenient for you to fasten and use YN900 on various kinds of flash bracket.
4. YN900 adopts 900 high-quality LED lamp beads with chips of extra-large luminous area. In the same energy consumption, the luminous intensity is greater, the facular is more uniform and the service life is longer.
5. YN900 adopts YONGNUO proprietary LED driving technology which does great help to effectively avoid corrugation and stroboscopic flash.
6. YN900 adopts encoder digital dimming system, including coarse tuning mode and fine tuning mode.
7. On the LED digital display screen of YN900, the parameter of the power output is intuitional.
8. Shooting for long time is possible because YN900 supports external DC power input (power adapter is optional).
9. The fan forced heat dissipation YN900 adopts solves the heating problem after the long use of LED video light.
10. YN900, equipped with 2 pieces of color temperature filters, can be used under different circumstances.

Ⅲ. Method of Application

1. Battery Installation

a. When installing the lithium battery, please put the battery into the slot in the direction of the arrow; please note that it needs two batteries to light up 900 lamp beads.

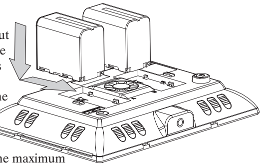

Notice: It is advised to use two batteries with the capacity of over 4000mah, with 4000mah, the batteries can be used for about 60 minutes in the maximum brightness, with 2200mah, the batteries can be used for about 30 minutes in the maximum brightness, with 5800mah, the batteries can be used for about 90 minutes in the maximum brightness, please remove the batteries when they are not in use.

Compatible battery: Sony NP-F series

NP-F750	NP-F550	NP-F530	NP-F970	NP-F330
NP-F950	NP-F570	NP-F770	NP-F960	NP-F930
NP-F930/B	NP-F970/B	NP-F950/B		

b. When removing the lithium batteries, please press the battery lock and then take out the lithium batteries.

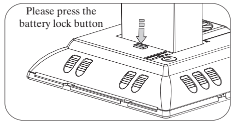

2. Fasten Video Light As Follow As Needed:

a.Fasten the video light to the tripod directly

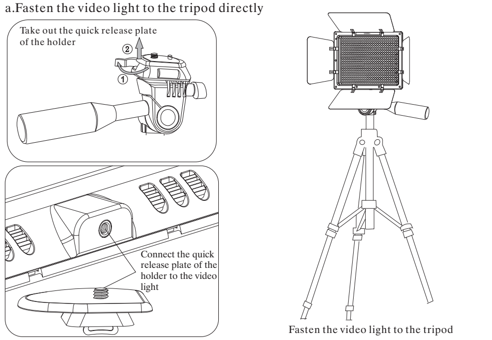

Fasten the video light to the tripod

b.Fasten the video light to the studio, lamp bracket or tripod with the multifunctional Type-D lamp holder attached

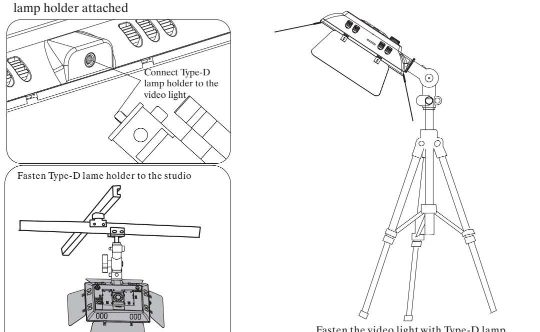

Fasten the video light with Type-D lamp holder to the lamp bracket or the tripod

c.Fasten the video light to the handle attached

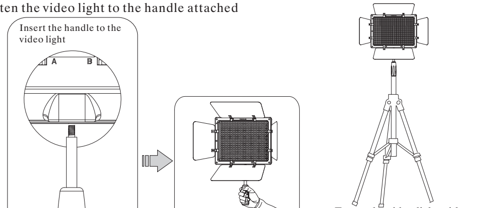

Fasten the video light with the handle to the lamp bracket

3. Start-up and adjust the brightness

a. When pressing the power switch button, the LED video light will light up; rotate this button rightwards the brightness of the LED video light will increase while leftwards will reduce.

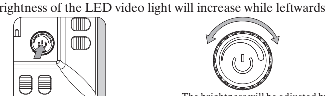

The brightness will be adjusted by rotating rightwards or leftwards

b. Luminance Adjusting Manner

There are two tuning modes for YN900. One is fine tuning mode, the other one is coarse tuning mode. It is more convenient for the users to use YN900 with these two tuning modes. By pressing Coarse button, the video light enters into coarse tuning mode, the luminance can be 10% adjusted by degrees. By pressing Fine button, the video light turns into fine tuning mode, the luminance can be 1% adjusted by degrees.

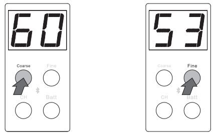

Coarse tuning mode　　Fine tuning mode

4. Battery Capacity Testing

By pressing Batt button, the percentage reading on the LED display screen is the battery remaining capacity of two batteries. The reading of the battery remaining capacity from P1 to P9 means the battery capacity is 10%-90% left. As the picture shows on the right, P3 means the battery capacity is 30% left. (Note: The battery remaining capacity tested when the luminous intensity is low will be different from the battery remaining capacity tested when the luminous intensity is high. The Battery capacity tested is how long the service time of YN900 will last under the current luminous intensity.)

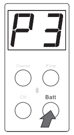

5. Channel Switching

The remote control receiving channel can be switched by pressing channel switching button [CH], and the LED display screen will show from H1 to H8. For example, if the channel is switched to channel H2, the channel of the remote controller will be adjusted to CH2 transmitting channel, at this moment, the video light can be adjusted by the remote controller. If you possess several YN900 video light, you can control their luminous intensity and switches by dividing these video lights into at most 8 groups. (There are 8 figures from 1 to 8 displaying on the panel of the remote controller. Each figure represents a corresponding channel. The channel can be switched by CH+/CH-.)

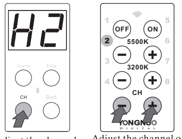

Adjust the channel of the video light to the channel needed

Adjust the channel of the remote controller to the same channel as the video light by adjusting CH+/CH- of the remote controller

6. External Power Supply

It is recommended to use YONGNUO power adapter with YN900 to obtain lasting service time. When using external power supply, the video light will stop the battery power supply automaticallyand will not get the battery charged. The external power supply interface outside is positive and the interface inside is negative. The input voltage is 19V and the electric current is 5A.Note: If YN900 defective when it is used with power adapter of other brands, YN900 will no longer be guaranteed for repair.

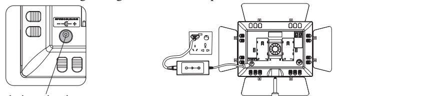

Use by inserting the power adapter through DC power hub

7. Fan Heat Dissipation

YN900 adopts intelligent fan heat dissipation, which is effective to emit the heat of LED video light after long time use, reduce lumens depreciation and extend service life. The fan runs automatically. To ensure the service life of YN900, please do not force the fan stop running, and keep the way between the air intake and the heat dissipation hole clear and unblocked.

Ⅳ.Color Temperature Filters

YN900 comes with two pieces of CT filters. Simply insert the CT filters into the side slot to meet your requirement in different circumstances.

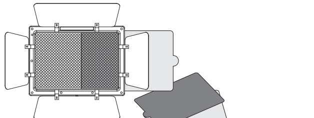

Ⅴ.Remote Dimming Mode

The wireless remote controller attached can adjust the luminous intensity and control the switches of YN900. The maximum remote controlling distance is up to 30 meters.

Ⅵ. Remote Control with Mobile APP

The product supports mobile phone remote controlling (supports Android4.3 and bluetooth 4.0 version/IOS7.0 and iPhone4S and above mobile phone),APP can be downloaded from the YONGNUO official website or through the dimensional code scanning on the gift box.

1.Introduction of APP Control Page

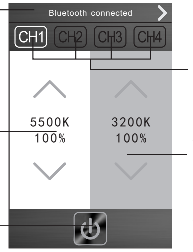

Ⅶ. Product Specification

Light Source	900 LED beads	Luminance Angle	55°
Color Temperature	5500K	Mobile Phone Remote Control Distance	＞30m
Color Rendering Index	⩾95	Remote Control Distance	＞30m
Output power	54W	Weight	1480g
Lumen	7200 LM	Size	260*188*48mm
Average Service Life	50000H	Power Supply	Two lithium batteries or external 19V or 5A DC power supply

Contents: Video light (1), Remote controller (1), Handle (1), User Manual (1), CT Filters (2), Type-D lamp holder (1)

Note: Please contact your dealer if anything missing.

Ⅷ. Failure Analysis and Troubleshooting

When using this product, you may encounter the following problems:

Description	Cause	Troubleshooting
No reaction after power on	Low Battery	Install new batteries or connect external power supply
	Damaged circuit board	Depot repair
Inadequate or low luminance at the greatest luminous intensity	Low battery	Install new batteries or re-charge the batteries
Inaccurate battery capacity test; low battery in high luminance and full battery in low luminance.	The battery capacity indicates the length of time available for the use in the current luminance. Higher luminance required more power and the length of time available for use will be shortened, so the battery capacity shown gets lower	Normal phenomenon and no measure needed
The video light can't be controlled remotely.	Too far away	Ensure the remote control distance is no more than 30 meters
The cooling fan sometimes works and sometimes stops working.	The cooling fan is automatically controlled by the LED video light, which cannot be manually turned on and off.	Normal phenomenon
The pilot lamp on the remote controller is dimming	Low battery	Replace two AAA batteries

Dealer: SHENZHEN YONGNUO PHOTOGRAPHY EQUIPMENT Co., Ltd

Add: 2-A511 Saige Science & Technology Park, North Huaqiang Rd, Futian District, Shenzhen, China

TEL: 0755-8376 2448

FAX: 0755-8376 2765

Web: www.hkyongnuo.com

Manufacturer: SHENZHEN YONGNUO ELECTRIC APPLIANCE Co., Ltd

Add: NO.1 Workshop, Tong Le Wen Hao Industrial Factory District, Longgang Sub-district, Longgang District, Shenzhen, China

TEL: 0755-8480 8443

After-sales Service TEL: 400-0013-888